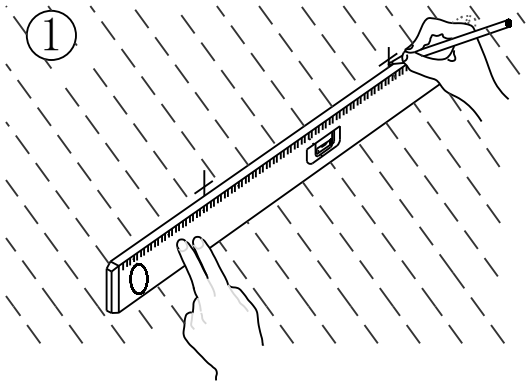
①

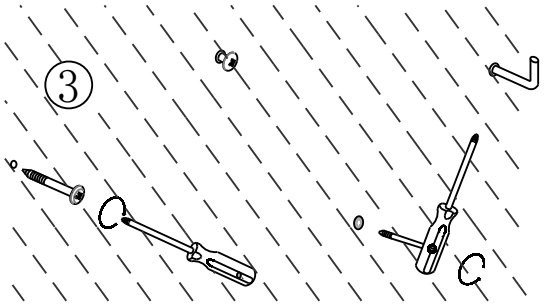
③

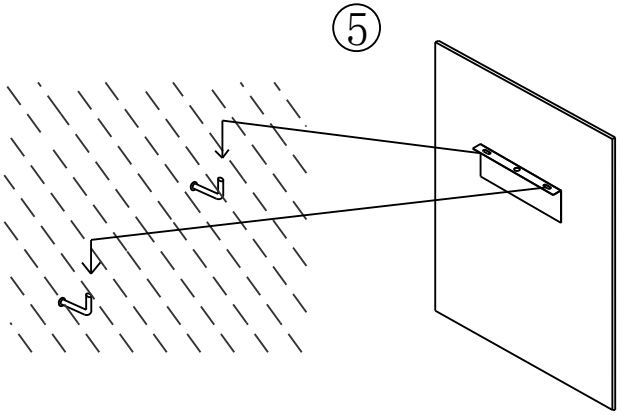
⑤

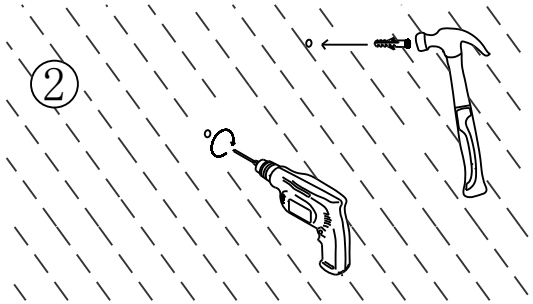
②

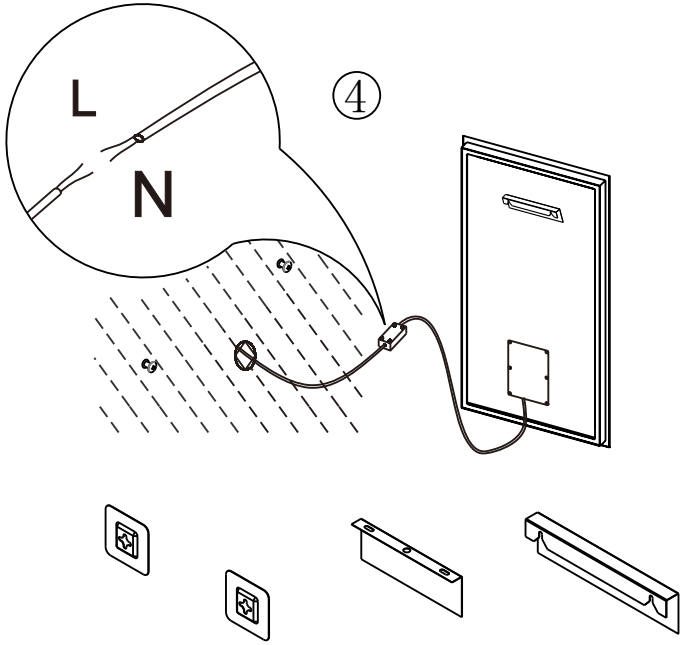
L
N
④

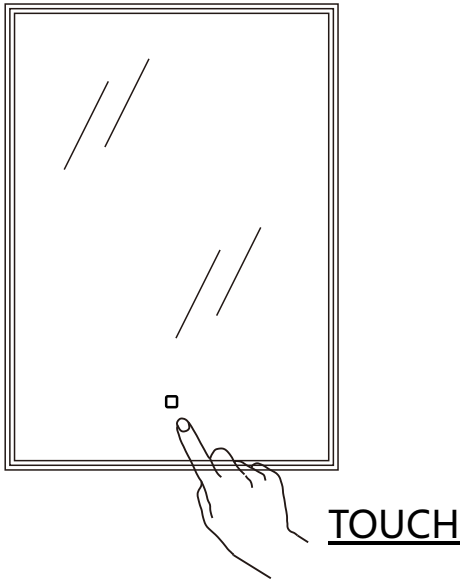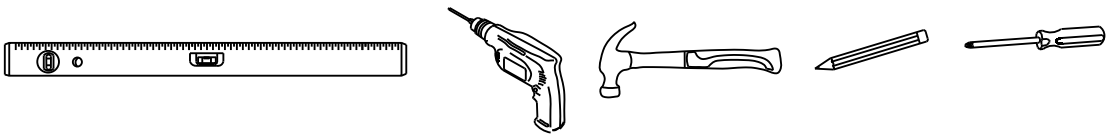
TOUCH